ITEM NO.	PART NUMBER	DESCRIPTION	QTY.
1	Roof Sheet Metal 0.063in	Sheet Metal Roof (1/16)"	2
2	Roof Side Sup 6x0.25	Roof Support 6x(1/4)" Beam	2
3	Roof Side Sup 6x0.25	Roof Support 6x(1/4)" Beam	4
4	Roof Sup Beam 3x3x0.125	Roof Support 3x(1/8)" Beam	22
5	Roof Rib 1.5x0.125	Roof Ribbing 43.5"	12
6	Roof Rib 1.5x0.125	Roof Ribbing 45"	24
7	Roof Lateral Sup 152in 76in	Lateral Support 152x(1/4") OUTER	2
8	Roof Lateral Sup 152in 76in	Lateral Support 76inx(1/4") INNER	5
9	Gussets Plates and Plugs Var 1	(1/16)" PLATE	4
10	Gussets Plates and Plugs Var 1	(1/2)" PLATE	8
11	Gussets Plates and Plugs Var 1	(3/8)" PLATE	8
12	Gussets Plates and Plugs Var 1	(3/8)" PLATE	4
13	Gussets Plates and Plugs Var 1	(1/4)" PLATE	4
14	Gussets Plates and Plugs Var 1	(1/4)" PLATE	4
15	Roof Concrete Base 6in	Footing: Concrete 5,000[psi]	4

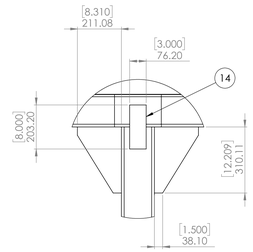

DETAIL C
SCALE 1 : 10

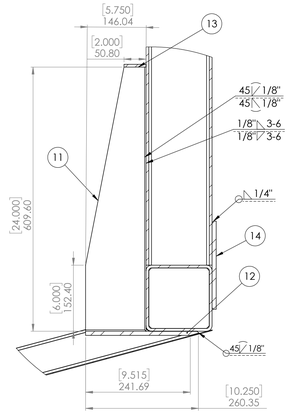

DETAIL E
SCALE 1 : 5

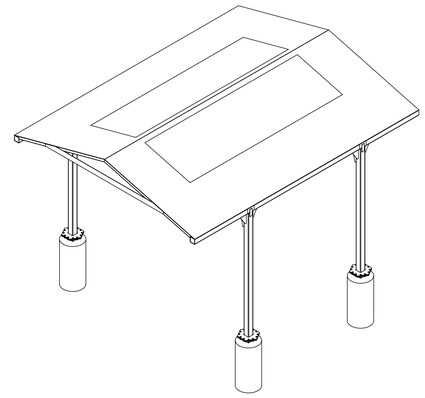

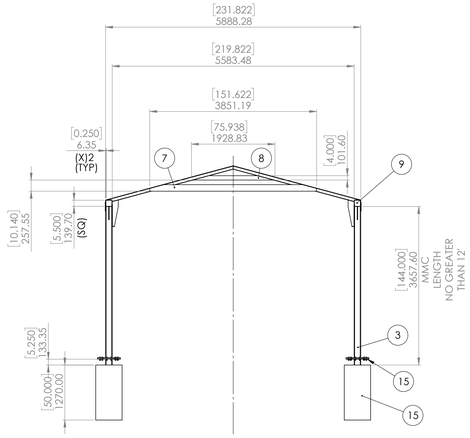

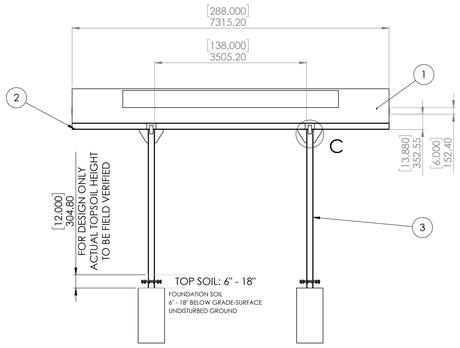

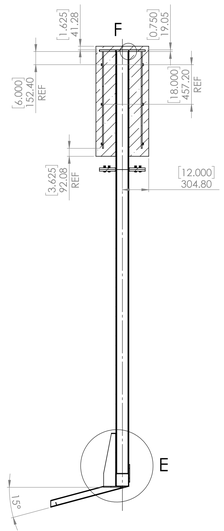

SECTION D-D
SCALE 1 : 25

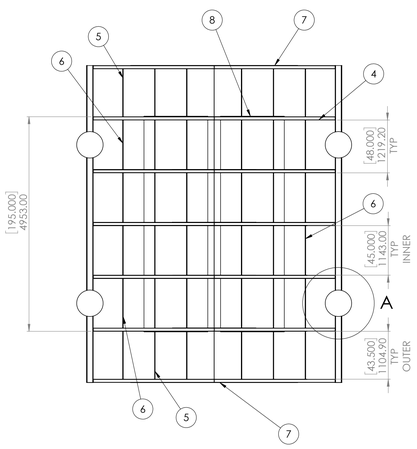

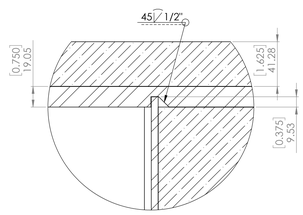

DETAIL F
SCALE 1 : 2

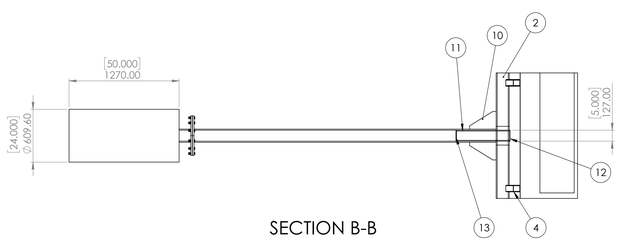

SECTION B-B
SCALE 1 : 25

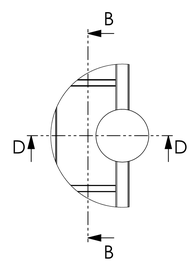

DETAIL A
SCALE 1 : 25

SPECIFICATIONS)
(1) ALL WORK SHALL BE COMPLETED/APPLICABLE TO 2024 IBC AND OSHA
(2) ALL WORK SHALL BE COMPLETED/APPLICABLE TO ALL OTHER APPLICABLE CODES
(3) ALL WORK SHALL BE COMPLETED/APPLICABLE TO ALL LOCAL CODES
(4) ALL PERMITS SHALL BE THE RESPONSIBILITY OF THE CONTRACTOR/S
(5) ALL SITE/FIELD MEASURMENTS SHALL BE FIELD VERIFIED PRIOR TO ON-SITE CONSTRUCTION
(6) CONTRACTOR/S SHALL BE RESPONSIBLE FOR MEASURMENT/PLACEMENT
(7) CONTRACTOR/S SHALL BE RESPONSIBLE FOR VERIFICATION OF STRUCTURAL STABILITY/PLACEMENT ON ALL SURFACES/SLOPES
  (1) VERTICAL MEMBERS MUST NOT SLANT
  (2) HORIZONTAL MEMBERS MUST NOT LEAN
(8) CONTRACTOR IS RESPONSIBLE FOR FIT/FINISH
  (1) NO DISJOINTED PARTS OR ASSEMBLIES
  (2) SURFACE ANOMOLIES/DISTORTIONS/DEFECTS
(9) FOR UNFORSEEN/UNEXPECTED SOIL DETRIMATES CONSULT SUPERVISING LEAD AND/OR ENGINEER
(10) UNREGISTERED/UNANTICIPATED EVENTS, STRUCTURAL OR OTHERWISE CONSULT SUPERVISOR
(11) FOUNDATION/S MOUNTING PLATES/FASTENERS MUST BE 2[IN] BELOW THE TOPSOIL/GRAVEL
(12) ROOF VERTICAL SUPPORTING MEMBERS ARE NOT TO EXCEED 12[FT] (3.66[M])

MATERIAL)
(13) ROOF MATERIAL IS 304SS, 18-8SS FOR FASTENERS IS ACCEPTABLE
(14) MATING SURFACES SHALL NOT CONTACT DISIMMILAR METALS
(15) ALUMINUM RODS MAY BE USED IN PLACE OF REBAR, W/R ALUMINUM STRUCTURE/S
(16) MATERIAL OF CAST CROSS OF THE CRUCIFIXION WAS DESIGNED W/R A383.0-F
(17) CAST MATERIAL WITH Sy (YIELD STRENGTH) OF 22[KSI] OR GREATER IS ACCEPTABLE
(18) ALUMINUM STRUCTURAL STEEL 6061-T6 T651, Sy OF 37[KSI] OR GREATER IS ACCEPTABLE
(19) ROOF: ALL VERTICAL SUPPORTS ARE TO BE LESS THAN 12[FT] (3.66[M]) FROM MOUTING PLATE
(20) CONCRETE:
  (1) FOOTINGS MAY BE SQUARE
  (2) CONCRETE COMPRESSION STRENGTH 3,000[PSI]

SURFACE FINISH)
(21) SURFACE FINISH AS DEFINED BY ANSI B46.1
(22) NO DEFECTS, DEFORMATIONS OR SCRATCHES
(23) VISIBLE PARTS RECIEVE TEXTURE
  (1) VISIBLE SURFACE FINISH ROUGHNESS RA 120[μIN] (3[μM])
  (2) VISIBLE SURFACE FINISH ROUGHNESS RMS 132[μIN] (3.4[μM])
  (3) VISIBLE SURFACE FINISH FOR ROOF/STRUCTURE NASF-M12-P OR NASF-C22-P
  (4) MECHANICAL OR CHEMICAL NON-DIRECTIONAL PER RA & RMS
(24) NON-VISIBLE PARTS, CCAS MANUFACTURED, M10
(25) NO TEXTURE ON CAST PARTS OR ASSEMBLIES, CROSS OF THE CRUCIFIXION
(26) NO TEXTURE ON CAST PARTS OR ASSEMBLIES, MIRACULOUS MEDAL

MATES/WELDS)
(27) WELD MATERIAL IS TO BE COMPATIBLE WITH MATERIALS
(28) Sy (YIELD STRENGTH) OF THE WELD MATERIAL IS TO BE GREATHER THAN THE MATING MATERIALS
(29) WELDS ARE TO BE CONVEX, MINIMUM OF 17% LARGER THAN THICKEST PART/PLATE
(30) ROOF-PANELS ARE SEAL WELDED BOTH SIDES, ITEM 1.1

MISC)
(31) STONE ALTAR IS TO BE REPAIRED
(32) STONE ALTAR IS TO BE A MINIMUM OF 6[IN] (155[MM]), IN THE HORIZONTAL, FROM THE CONCRETE FOUNDATION OF THE CROSS
(33) ALL BOLTS ARE TO BE DOUBLE-NUTTED: 1ST NUT (TO PART) AT 10[LBF-FT], 2ND NUT (TO NUT) AT 15 20[LBF-FT], NO SPACER BETWEEN THE NUTS

STATS/DATA)
(34) DATA IS MASTER
(35) BACKGROUND, DETAILS AND CALCULATIONS ARE LOCATED IN "Architectural Modeling 3 Crosses Rev 20--" (LATEST DATE - WORD/PDF DOCUMENT)
(36) WEIGHT OF THE CROSS OF THE CRUCIFIXION IS 860[LBF] (390[KG] SOLID
(37) VOLUME OF THE CROSS OF THE CRUCIFIXION IS 5.2[FT3] (0.15[M3]) SOLID
(38) WEIGHT OF MOTHER MARY IS LESS THAN 5,500 [FT3] (2,500[KG])
(39) VOLUME OF MOTHER MARY IS LESS THAN 33[FT3] (0.92[M3])
(40) CAST-PARTS MAY CONTAIN CAVITIES
  (1) THE HEAD/NECK/LEGS ARE TO REMAIN SOLID
  (2) THE GLOBE MAY MAINTAIN A 3.5[IN] (90[MM]) SHELL
  (3) MOTHER MARY & CORPSE MUST MAINTAIN A MINIMUM 2.5[IN] (64[MM]) SHELL

(41) CAST MODELS OF THE CROSS OF THE CRUCIFIXION ARE LOCATED IN)
  (1) "Cross Body ASM 1 IGS.7z"
  (2) "Cross Body ASM 1 Part 1 sldprt.zip"
  (3) "Cross Body ASM 1 PLY.zip"
  (4) "Cross Body ASM 1.zip" (SOLIDWORKS INDIVIDUAL SEGMENTS
  (5) "Full ASMCnBmodel 20.7z" (BLENDER GRAPHICS)
  (6) "Full ASMCnBmodel 20.zip" (BLENDER GRAPHICS, STL AND OTHER)

(42) CAST MODELS OF THE MOTHER MARY AND GLOBE (THE MIRACULOUS MEDAL) ARE LOCATED IN
(43) -CCCCCCCCCCCCCCCCCCCCCCCCCCCCCCCC

GEORGIA REGISTERED No. PE052322 PROFESSIONAL ENGINEER DANIEL WIDHALM

31 Jan 2026

UNLESS OTHERWISE SPECIFIED:
DIMENSIONS: [mm] - [in]
TOLERANCES: [+/-] 1.5[%]

LOCATION: 2900 HWY 138 NE, CONYERS GA, 30013 (1/10 @ THE HOLY HILL)
S.F.LOADING: 30.7[lb]/[ft2]-43.95[kN/m2] (B3-S7W3)
W.F.LOADING: 90[MPH], CLASS 1
S1: STRUCTURAL, CLASS 1
C1: CIVIL, CLASS 1

DEBURR AND BREAK SHARP EDGES

DO NOT SCALE DRAWING

REVISION 01

CREO DESIGNS

	NAME	SIGNATURE	DATE
DRAWN			
CHK'D			
APPV'D			
MFG			
Q.A			

MATERIAL: SEE NOTES

WEIGHT:

TITLE:
ROOF ASM
ROOF & PANELS
ROOF SUPPORTS
ROOF FOOTING/S

DWG NO. M1-S1-C1-001-0001

A0

SCALE:1:50

SHEET 2 OF 3